MS4525DO

SPECIFICATIONS

- **PCB Mounted Digital Output Transducer**
- **Combination Temperature and Pressure**
- **I^2C or SPI Protocol**
- **Differential, Gage, Absolute, Compound, & Vacuum**
- **Temperature Compensated**
- **3.3 or 5.0 V_{DC} Supply Voltage**
- **Low Power Option Available (standby < 1µA)**

FEATURES

- PSI Pressure Ranges
- PCB Mountable
- Digital Output
- Barbed Pressure Ports

APPLICATIONS

- Blocked Filter Detection
- Altitude and Airspeed Measurements
- Medical Instruments
- Fire Suppression System
- Panel Meter
- Air Movement/Environmental Controls
- Pneumatic Controls

The MS4525DO is a small, ceramic based, PCB mounted pressure transducer from TE Connectivity. The transducer is built using our proprietary UltraStable™ process and the latest CMOS sensor conditioning circuitry to create a low cost, high performance digital output pressure (14bit) and temperature (11bit) transducer designed to meet the strictest requirements from OEM customers.

The MS4525DO is fully calibrated and temperature compensated with a total error band (TEB) of less than 1.0% over the compensated pressure range. The sensor operates from single supply of either 3.3 or 5.0V_{DC} and requires a single external component for proper operation

The rugged ceramic transducer is available in side port, top port, and manifold mount and can measure absolute, gauge, differential, vacuum or compound pressure from 1 to 150psi. The 1/8” barbed pressure ports mate securely with 3/32” ID tubing.

STANDARD RANGES (PSI)

Pressure	Absolute	Gage	Differential	Compound	Vacuum	Option Availability
1		DS, SS, TP, MM	DS, SS, TP, MM			-F, -L, -M
2		DS, SS, TP, MM	DS, SS, TP, MM			-F, -L, -M
5		DS, SS, TP, MM	DS, SS, TP ,MM			-F, -L, -M
15	SS, TP	DS, SS, TP, MM	DS, MM	SS, TP	SS, TP, DS	-F, -L, -M
30	SS, TP	DS, SS, TP, MM	DS, MM	SS, TP		-F, -L, -M
50	SS, TP	DS, SS, TP, MM	DS, MM	SS, TP		-F, -L, -M
100	SS, TP	DS, SS, TP, MM	DS, MM	SS, TP		-F, -L, -M
150	SS, TP	DS, SS, TP, MM	DS, MM	SS, TP		-F, -L, -M

See Package Configurations: DS= Dual Side Port, SS= Single Side Port, TP= Top Port, MM= Manifold Mount
Only I^2C Protocol is Available on "L" type Pin Styles; Reference Ordering Information for Details
Pin Style "L" is only available SS and MM port types.
Pin Style "C" is only available SS, TP and MM port types.

BLOCK DIAGRAM

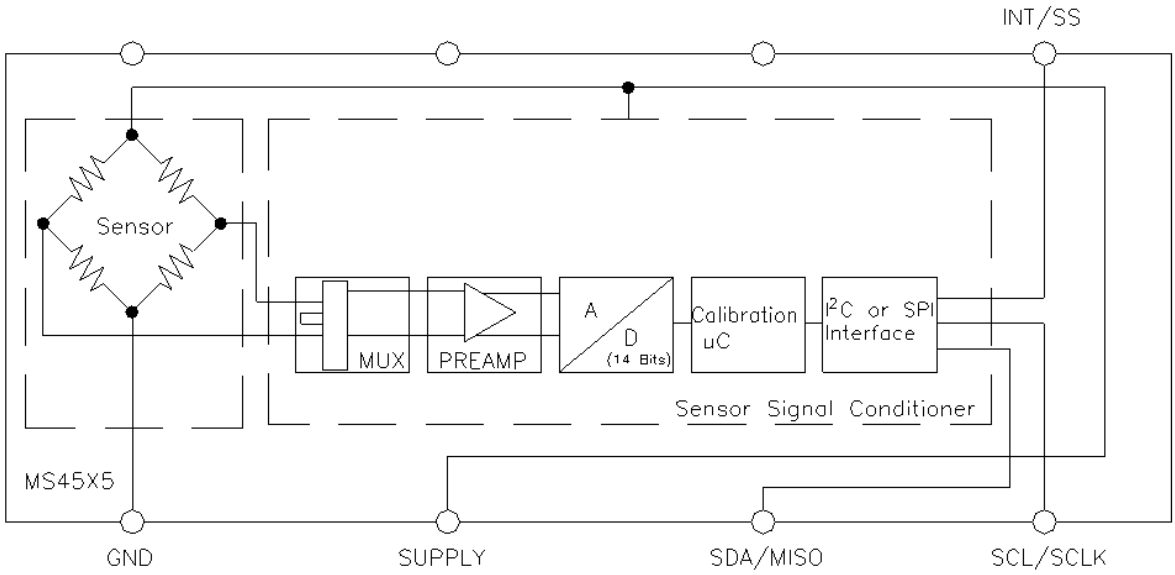

ABSOLUTE MAXIMUM RATINGS

Parameter	Conditions	Min	Max	Unit	Notes
Supply Voltage	T_A = 25 °C	2.7	5.5	V	
Output Current	T_A = 25°C		3	mA	
Storage Temperature		-40	+125	°C	
Humidity	T_A = 25°C		95	%RH	Non Condensing
Overpressure	T_A = 25 °C, both Ports	Not to Exceed 300		psi	
Burst Pressure	T_A = 25 °C, Port 1			psi	See Table 1
ESD	HBM	-4	+4	kV	EN 61000-4-2
Solder Temperature		250°C, 5 sec max.			

TABLE 1- BURST PRESSURE BY RANGE AND PACKAGE STYLE

Range	DS	SS, TP, MM	Unit
001	20	20	psi
002	20	20	psi
005	15	20	psi
015	45	90	psi
030	90	200	psi
050	150	300	psi
100	300	300	psi
150	300	300	psi

ENVIRONMENTAL SPECIFICATIONS

Parameter	Conditions
Mechanical Shock	Mil Spec 202F, Method 213B, Condition C, 3 Drops
Mechanical Vibration	Mil Spec 202F, Method 214A, Condition 1E, 1Hr Each Axis
Thermal Shock	100 Cycles over Storage Temperature, 30 minute dwell
Life	1 Million FS Cycles
MTTF	>10Yrs, 70 ºC, 1.188 Million Pressure Cycles, 120%FS Pressure

PERFORMANCE SPECIFICATIONS

Supply Voltage[1]: 5.0V or 3.3 V_{DC}
Reference Temperature: 25°C (unless otherwise specified)

PARAMETERS	MIN	TYP	MAX	UNITS	NOTES
Accuracy	-0.25		0.25	% SPAN	2
Total Error Band	-1		1	% SPAN	3,7
Burst pressure		SEE TABLE 1			
Common mode pressure		NOT TO EXCEED 300 PSI			
Load Resistance (R_L)	10			kΩ	
Long term stability (offset & span)		±0.5		% SPAN	
Compensated Temperature	-10		85	°C	
Operating Temperature	-25		105	°C	
Weight		3		grams	
Update time		0.5		ms	6
Start time to data ready			8.4	ms	6
Solder temperature		250°C MAX 5 SEC.			
Media	Non-Corrosive Dry Gases Compatible with Ceramic, Silicon, Borosilicate Glass, RTV, Gold, Aluminum and Epoxy. See "Wetted Material by Port Designation" chart below.				

Notes

1. Proper operation requires an external capacitor placed as shown in Connection Diagram. Output is not ratiometric to supply voltage.
2. The maximum deviation from a best fit straight line (BFSL) fitted to the output measured over the pressure range at 25C. Includes all errors due to pressure non linearity, hysteresis, and non repeatability.
3. Total pressure error band includes all accuracy errors, thermal errors over the compensated temperature range and span and offset calibration tolerances. For ideal sensor output with respect to input pressure and temperature, reference Transfer Function charts below. TEB values are valid only at the calibrated supply voltage.
4. The deviation from a best fit straight line (BFSL) fitted to the output measured over the compensated temperature range.
5. For errors beyond the compensated temperature range, see Extended Temperature Multiplier chart below.
6. Start time to data ready is the time to get valid data after POR (power on reset). The time to get subsequent valid data is then specified by the update time specification.
7. This product can be configured for custom OEM requirements, contact factory for lower power consumption or higher accuracy.

CONNECTION DIAGRAM

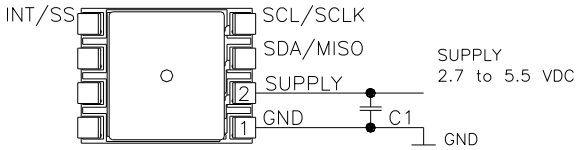

Notes

1. Place 100nF capacitor between Supply and GND to within 2 cm of sensor.

PRESSURE AND TEMPERATURE TRANSFER FUNCTION

Pressure Transfer Functions

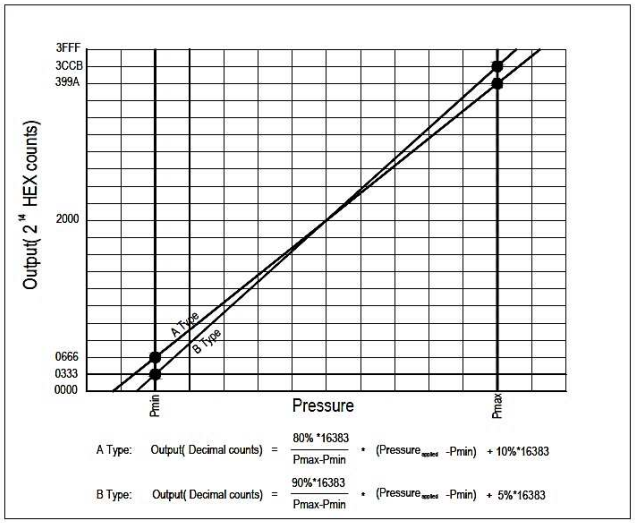

Temperature Transfer Functions

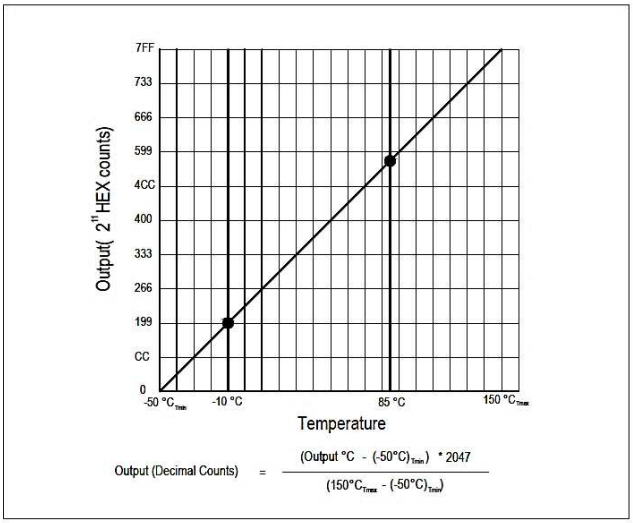

Sensor Output at Significant Percentages

% of Count	Output Type A (psi)	Output Type B (psi)	Digital Counts (decimal)	Digital Counts (hex)
0	P_{MIN}-(P_{MAX}-P_{MIN})*10/80	P_{MIN}-(P_{MAX}-P_{MIN})*5/90	0	0X0000
5		P_{MIN}	819	0X0333
10	P_{MIN}		1638	0X0666
50			8192	0X2000
90	P_{MAX}		14746	0X399A
95		P_{MAX}	15563	0X3CCB
100	P_{MAX}+(P_{MAX}-P_{MIN})*10/80	P_{MAX}+(P_{MAX}-P_{MIN})*5/90	16383	0X3FFF

Temperature Output vs Counts

OUTPUT (°C)	Digital Count (decimal)	Digital Counts (hex)
-50	0	0X0000
0	511	0X01FF
10	614	0X0266
25	767	0X02FF
50	1023	0X03FF
85	1381	0X0565
150	2047	0X07FF

Vacuum Series Pressure Transfer Functions

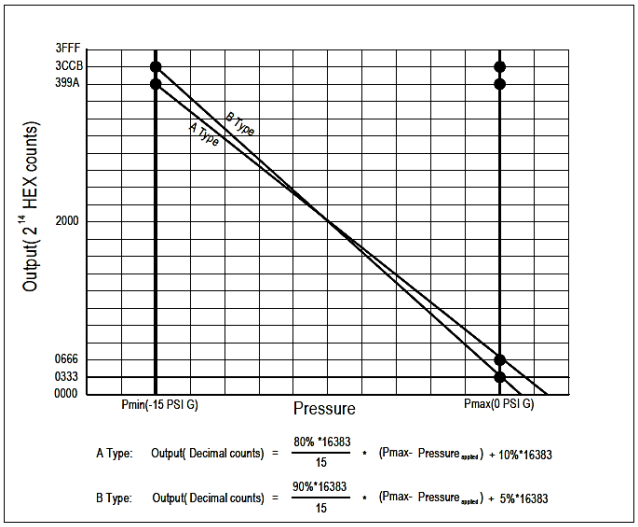

Temperature Transfer Functions

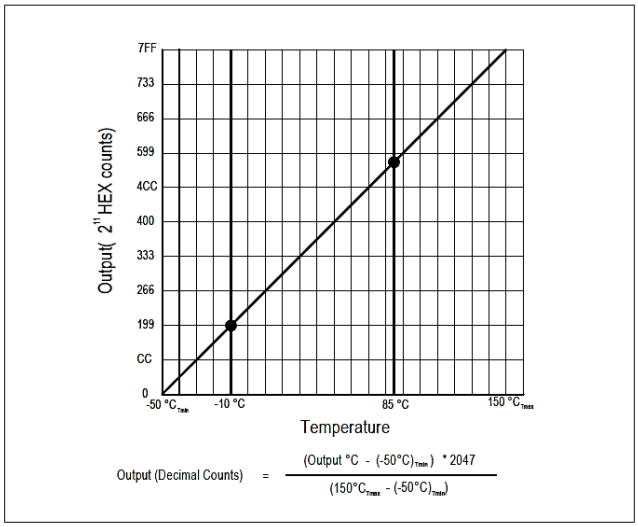

Sensor Output at Significant Percentages

% of Count	Output Type A (psi)	Output Type B (psi)	Digital Counts (decimal)	Digital Counts (hex)
0	1.6875	0.833	0	0X0000
5		0	819	0X0333
10	0		1638	0X0666
50			8192	0X2000
90	-15		14746	0X399A
95		-15	15563	0X3CCB
100			16383	0X3FFF

Temperature Output vs Counts

OUTPUT (°C)	Digital Count (decimal)	Digital Counts (hex)
-50	0	0X0000
0	511	0X01FF
10	614	0X0266
25	767	0X02FF
50	1023	0X03FF
85	1381	0X0565
150	2047	0X07FF

EXTENDED TEMPERATURE MULTIPLIER CHART

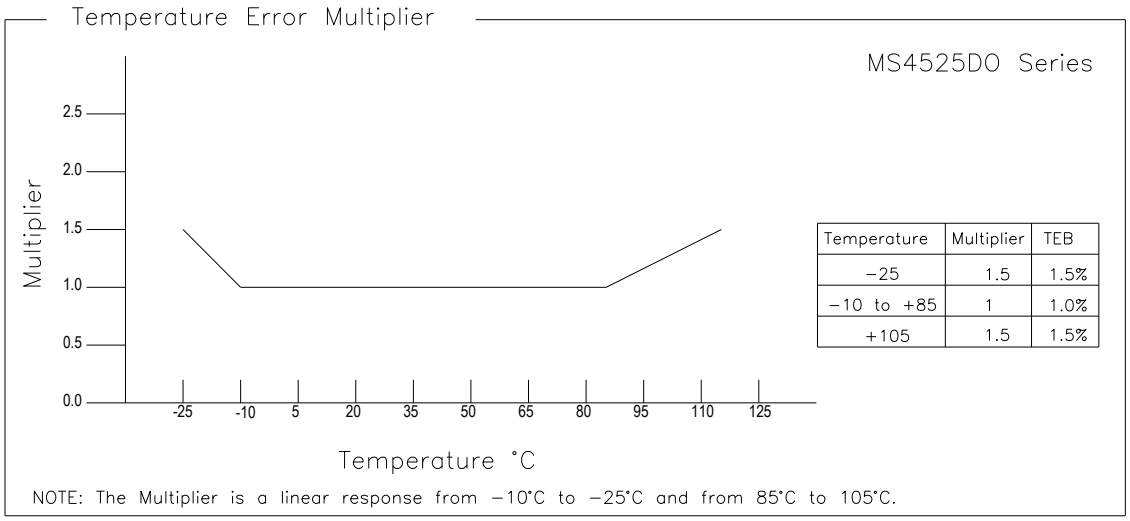

Temperature	Multiplier	TEB
−25	1.5	1.5%
−10 to +85	1	1.0%
+105	1.5	1.5%

PACKAGE, PINOUT & PRESSURE TYPE CONFIGURATION

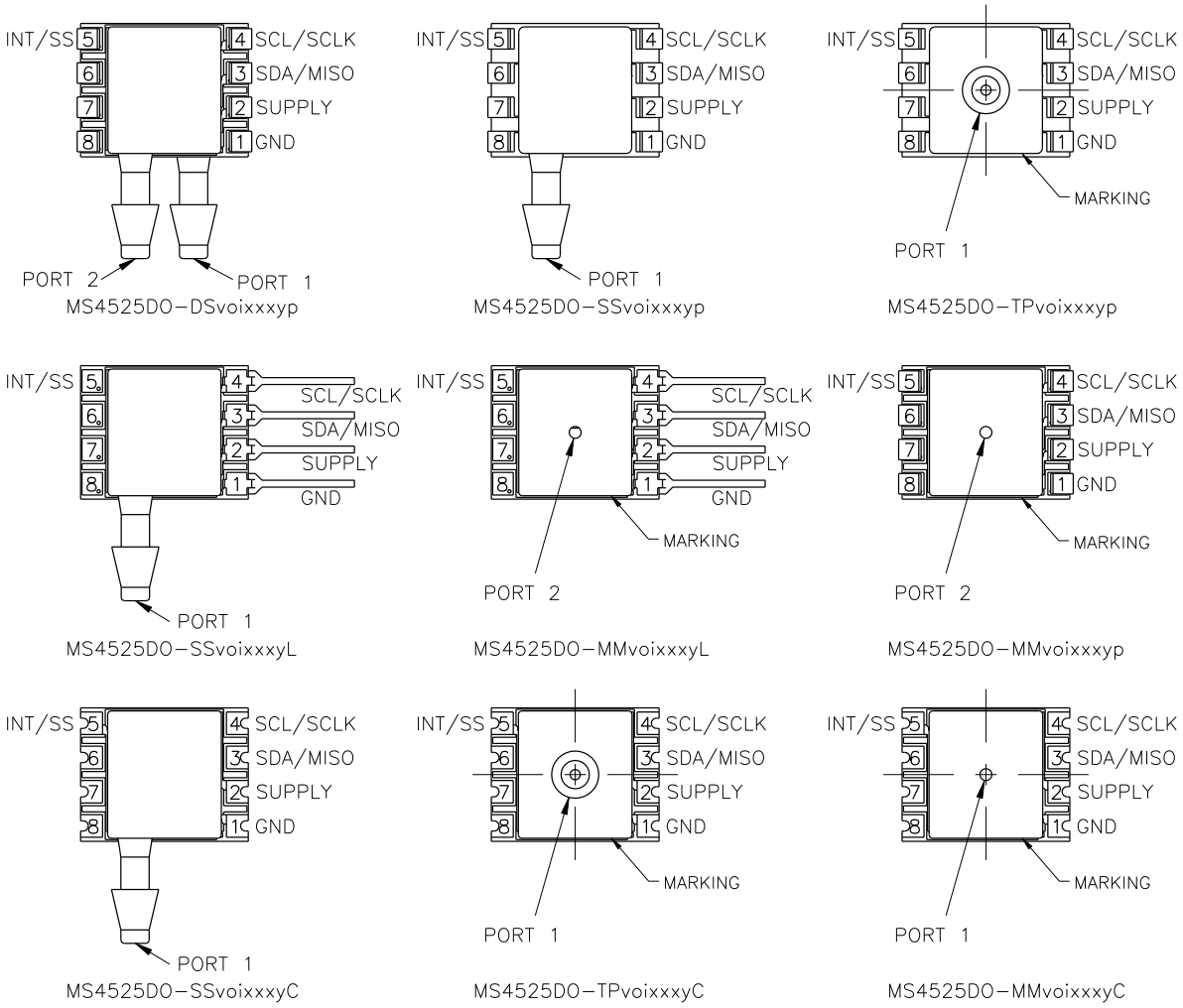

Pin Name		Pin	Function	
GND		1	Ground	
SUPPLY		2	Positive Supply Voltage	
SDA	MISO	3	I2C Data	SPI Data
SCL	SCLK	4	I2C Clock	SPI Clock
INT	SS	5	I2C Interrupt	SPI Chip Select
		6-8	No Connection	

INT is not available for Pin Style "L" models

Pressure Type	P_{min}	P_{max}	Description
Absolute	0psiA	$+P_{range}$	Output is proportional to the difference between 0psiA (P_{min}) and pressure applied to Port 1.
Differential/ Bidirectional	$-P_{range}$	$+P_{range}$	Output is proportional to the difference between Port 1 and Port 2. Output swings positive when Port 1> Port 2. Output is 50% of total counts when Port 1=Port 2.
Gauge	0psiG	$+P_{range}$	Output is proportional to the difference between 0psiG (P_{min}) and Port 1. Output swings positive when Port 1> Port 2.
Vacuum	-15psiG	+0psiG	Output is inversely proportional to the difference between -15psiG pressure (P_{min}) and pressure applied to Port 1.
Compound	-15psiG	$+P_{range}$	Output is proportional to the difference between -15psiG pressure (P_{min}) and pressure applied to Port 1.

*P_{range} is equal to the maximum full scale pressure specified in the ordering information.

Standard ranges (psi) by port style

WETTED MATERIAL BY PORT DESIGNATION

		Material						
Style	Port	Ceramic	Silicon	Borosilicate Glass	RTV	Gold	Aluminum	Epoxy
DS, MM	Port 1	X	X	X	X			X
	Port 2	X	X	X	X	X	X	X
SS, TP, SM	Port 1	X	X	X	X	X	X	X

'X' indicates Wetted Material

I²C INTERFACE

I2C INTERFACE PARAMETERS					
PARAMETERS	**SYMBOL**	**MIN**	**TYP**	**MAX**	**UNITS**
SCLK CLOCK FREQUENCY	FSCL	100		400	KHz
START CONDITION HOLD TIME RELATIVE TO SCL EDGE	tHDSTA	0.1			uS
MINIMUM SCL CLOCK LOW WIDTH @1	tLOW	0.6			uS
MINIMUM SCL CLOCK HIGH WIDTH @1	tHIGH	0.6			uS
START CONDITION SETUP TIME RELATIVE TO SCL EDGE	tSUSTA	0.1			uS
DATA HOLD TIME ON SDA RELATIVE TO SCL EDGE	tHDDAT	0			uS
DATA SETUP TIME ON SDA RELATIVE TO SCL EDGE	tSUDAT	0.1			uS
STOP CONDITION SETUP TIME ON SCL	tSUSTO	0.1			uS
BUS FREE TIME BETWEEN STOP AND START CONDITION	tBUS	2			uS

@1 COMBINED LOW AND HIGH WIDTHS MUST EQUAL OR EXCEED MINIMUM SCL PERIOD.

I2C INTERFACE TIMING DIAGRAM

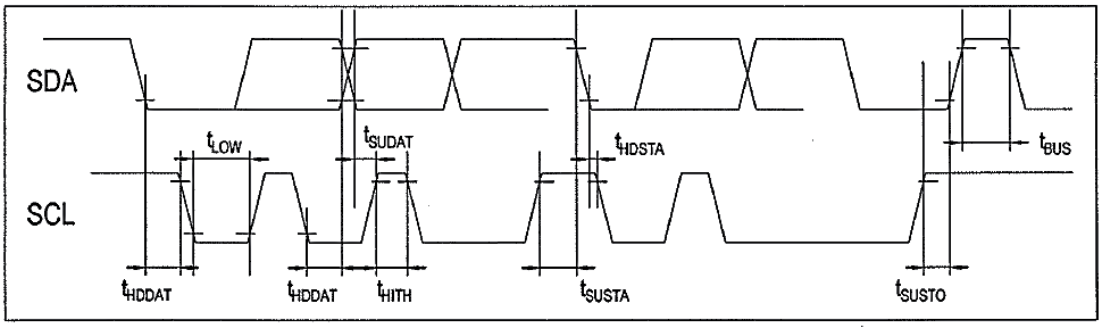

SPI INTERFACE

SPI INTERFACE PARAMETERS					
PARAMETERS	**SYMBOL**	**MIN**	**TYP**	**MAX**	**UNITS**
SCLK CLOCK FREQUENCY	FSCL	50		800	KHz
SS DROP TO FIRST CLOCK EDGE	tHDSS	2.5			uS
MINIMUM SCL CLOCK LOW WIDTH @1	tLOW	0.6			uS
MINIMUM SCL CLOCK HIGH WIDTH @1	tHIGH	0.6			uS
CLOCK EDGE TO DATA TRANSITION	tCLKD	0		0.1	uS
RISE OF SS RELATIVE TO LAST CLOCK EDGE	tSUSS	0.1			uS
BUS FREE TIME BETWEEN RISE AND FALL OF SS	tBUS	2			uS

@1 COMBINED LOW AND HIGH WIDTHS MUST EQUAL OR EXCEED MINIMUM SCLK PERIOD.

SPI INTERFACE TIMING DIAGRAM

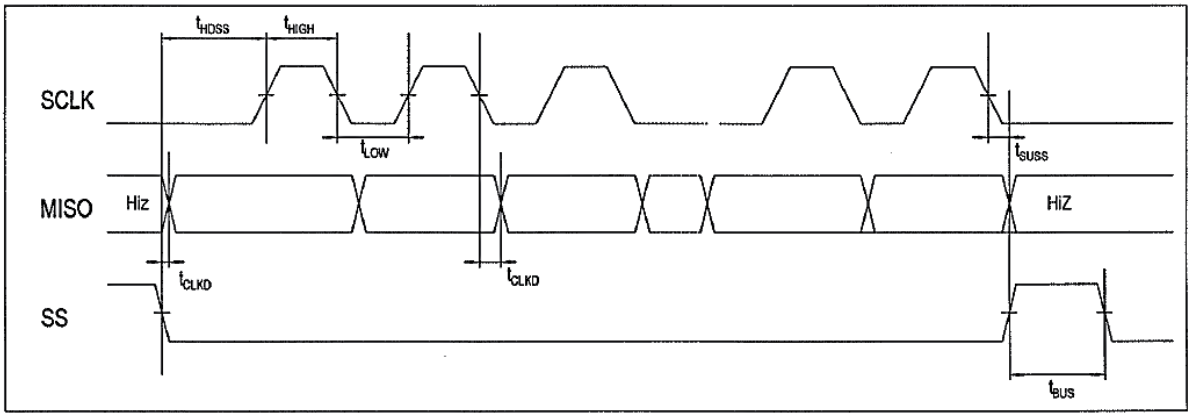

DIMENSIONS

Model: MS4525DO-DSvoixxxyP

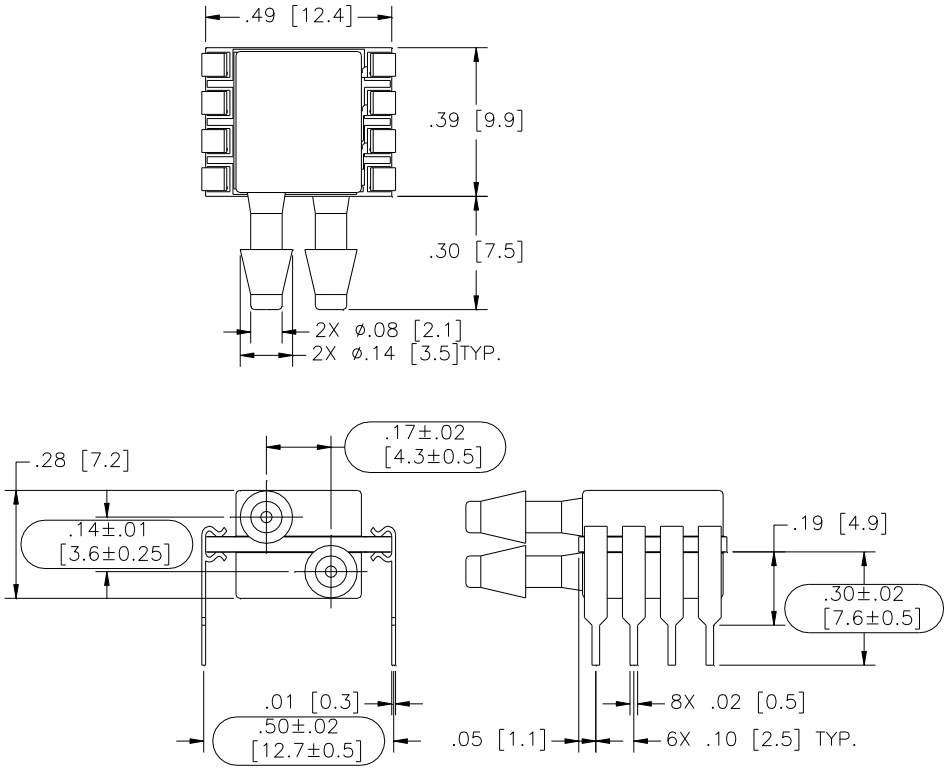

Model: MS4525DO-DSvoixxxyS

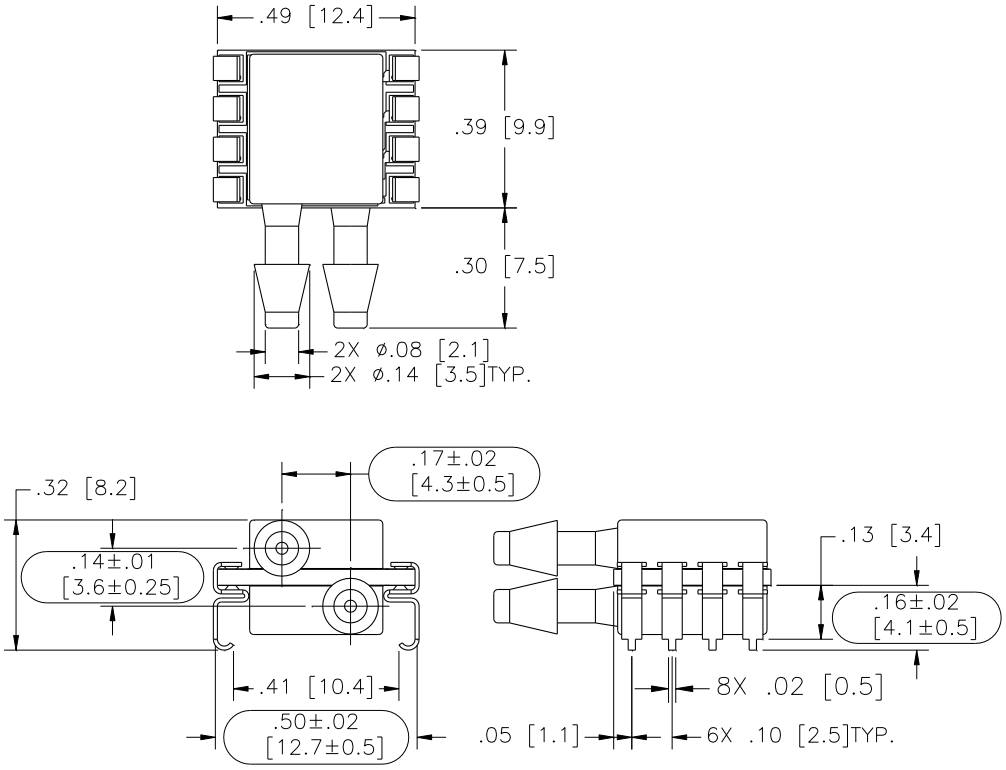

Model: MS4525DO-SSvoixxxyP

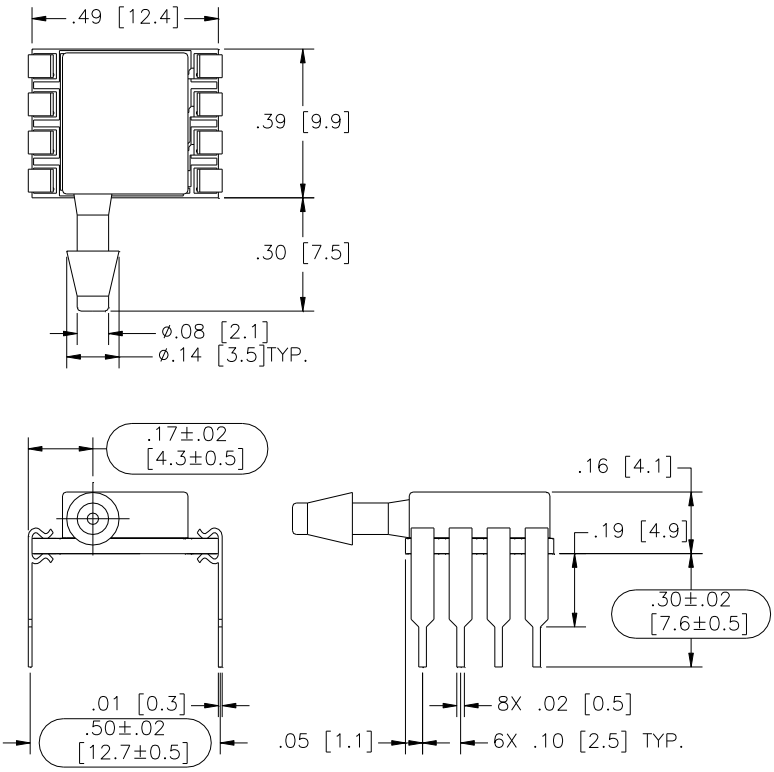

Model: MS4525DO-SSvoixxxyS

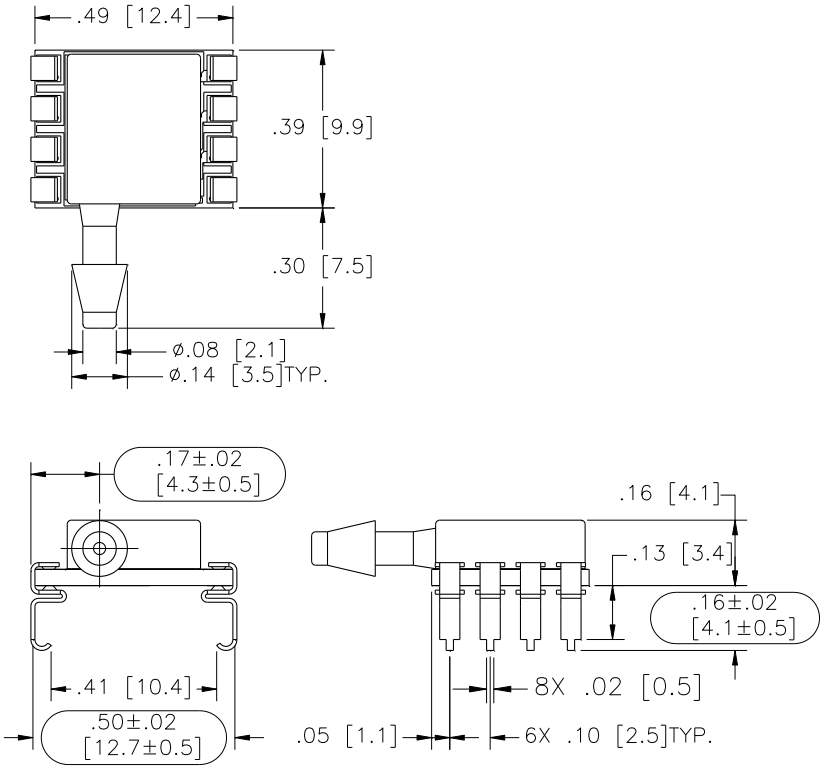

Model: MS4525DO-TPvoixxxyP

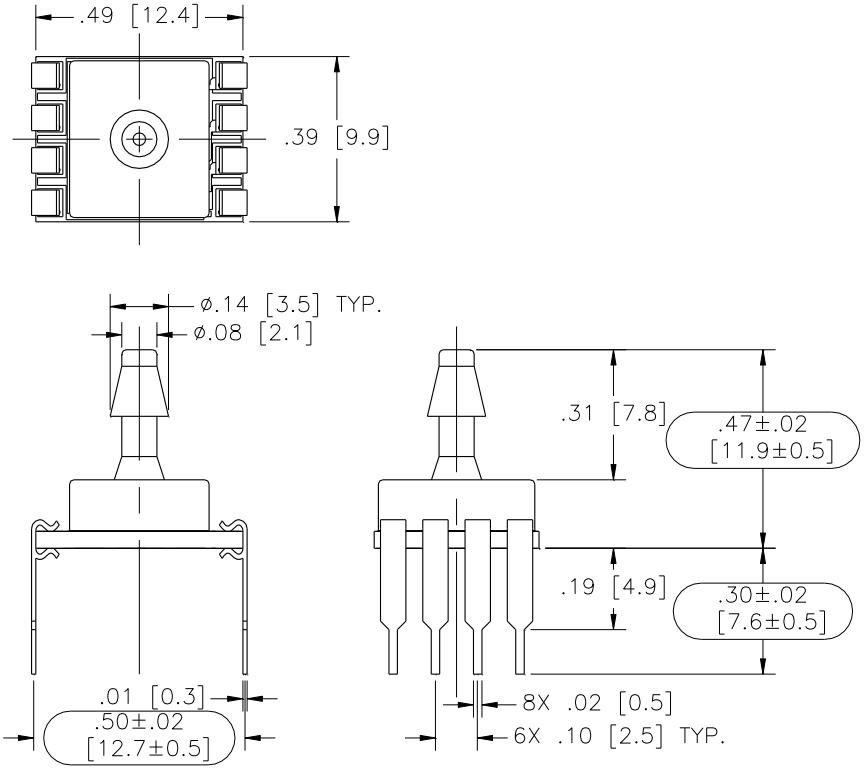

Model: MS4525DO-TPvoixxxyS

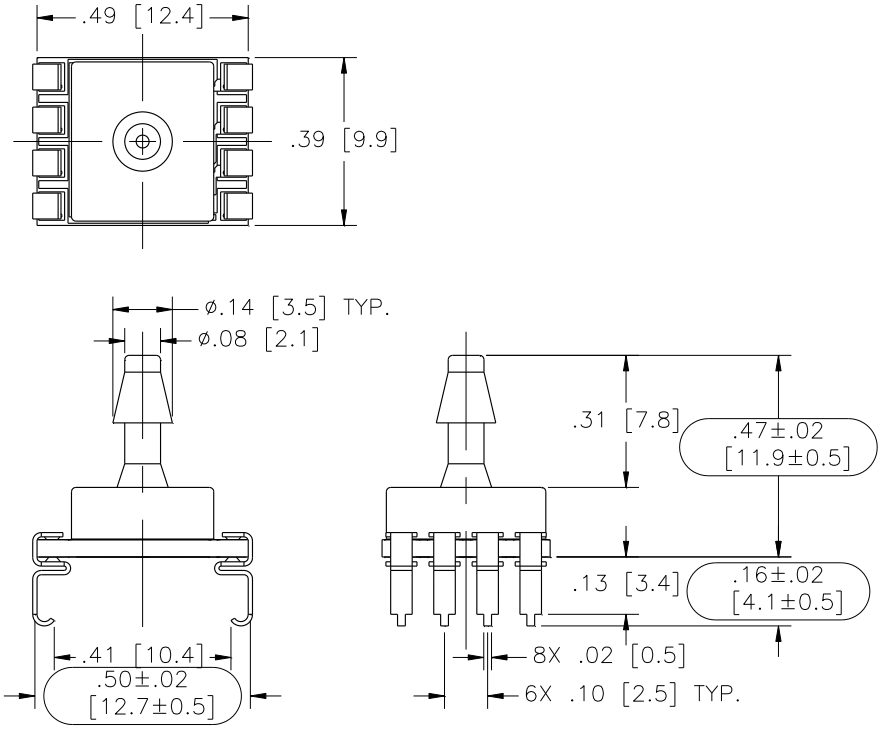

Model: MS4525DO-SSvoixxxyL

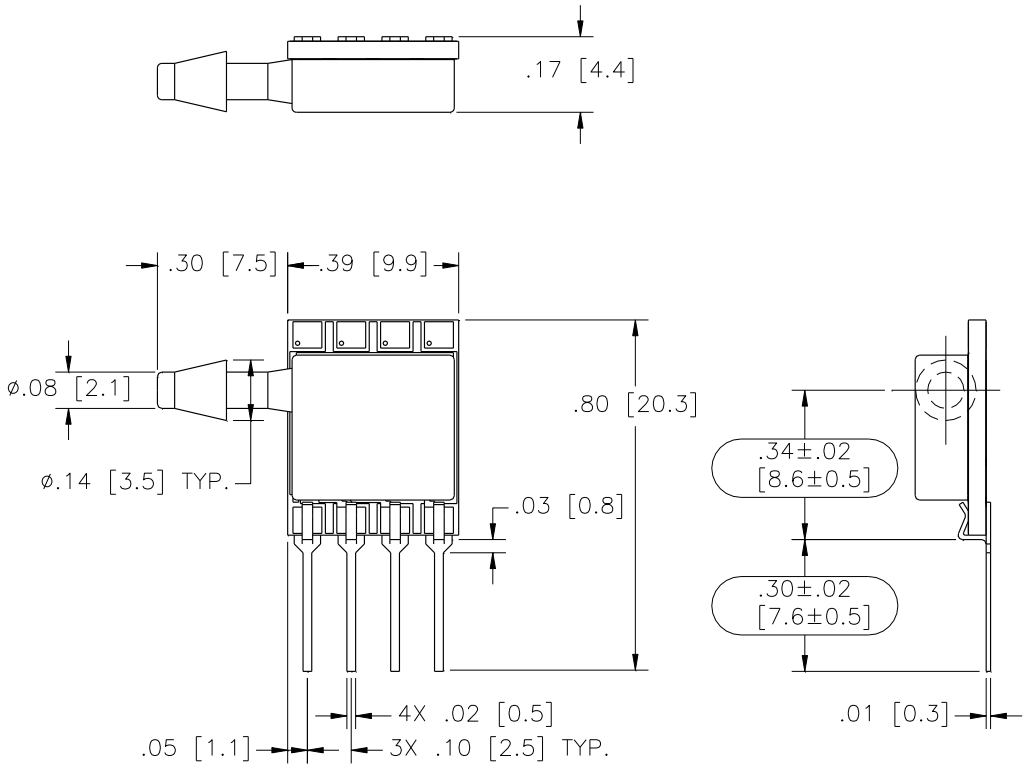

Model: MS4525DO-MMvoixxxyL

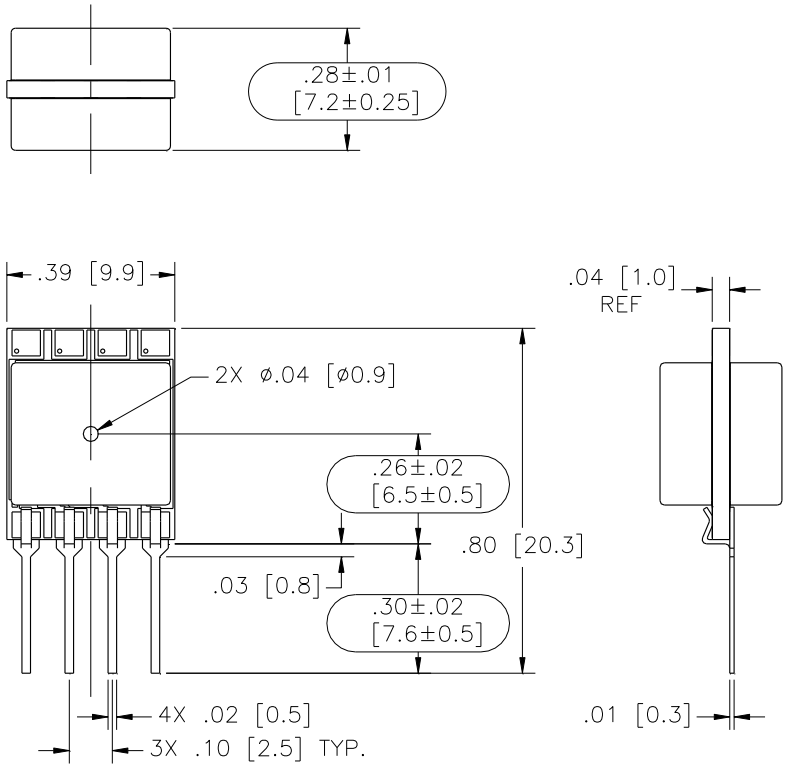

Model: MS4525DO-MMvoixxxyP

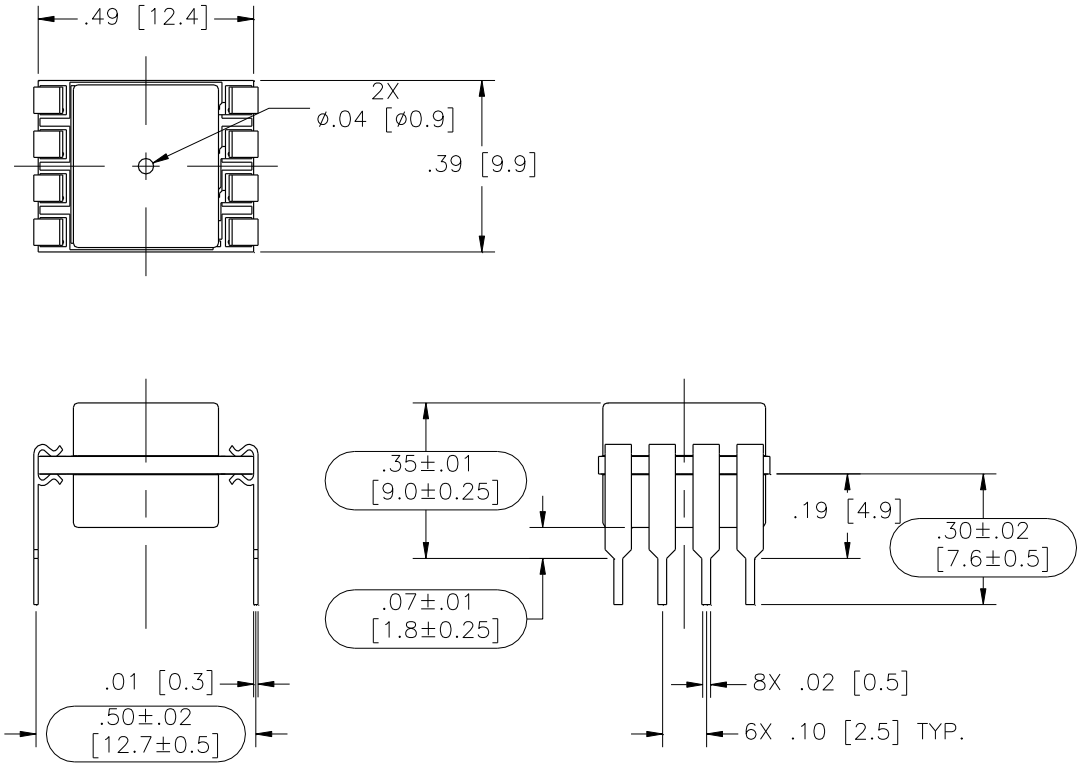

Model: MS4525DO-MMvoixxxyS

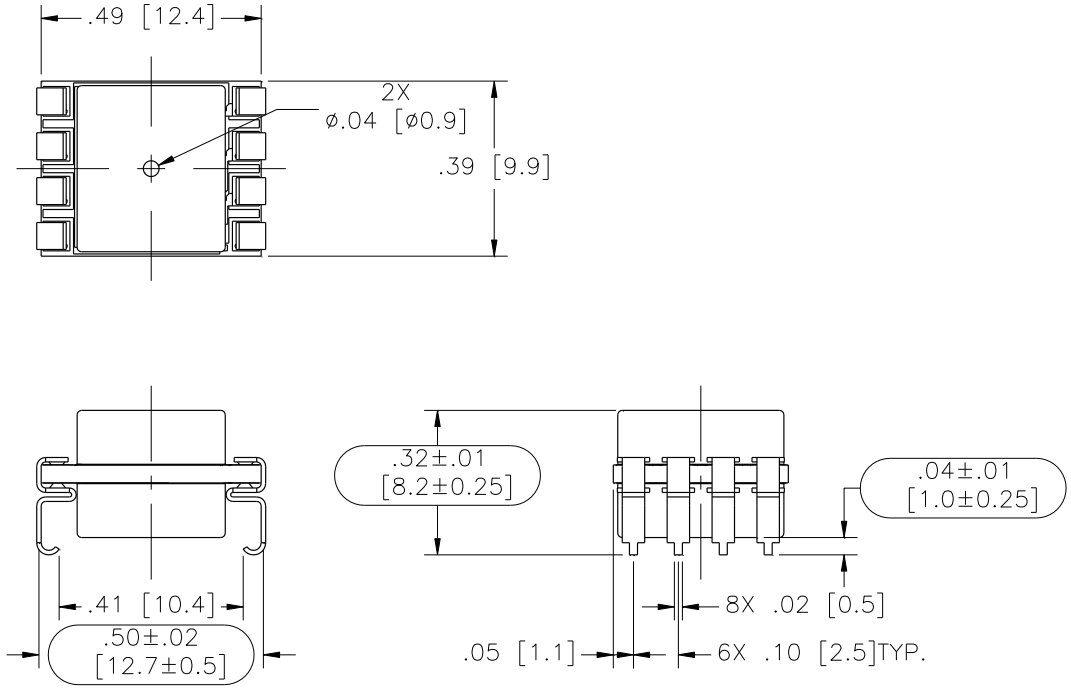

Model: MS4525DO-SSvoixxxyC

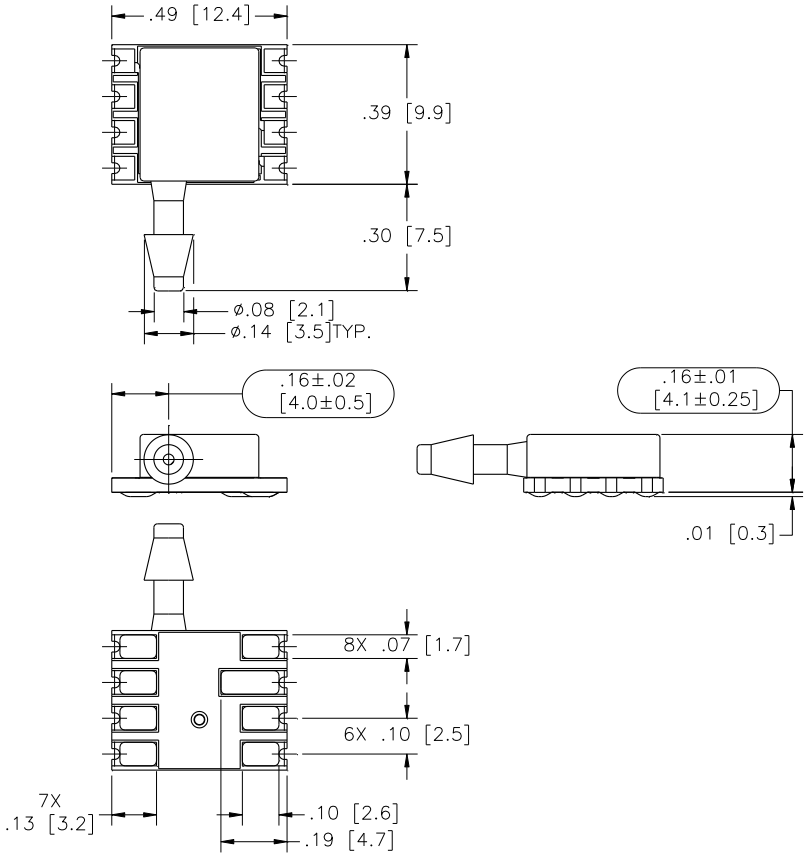

Model: MS4525DO-TPvoixxxyC

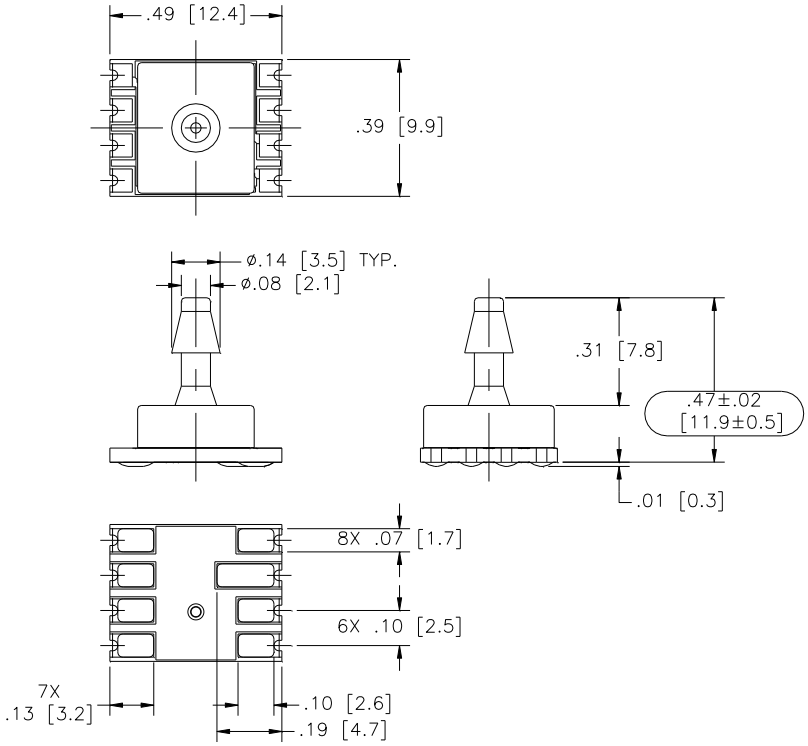

Model: MS4525DO-MMvoixxxyC

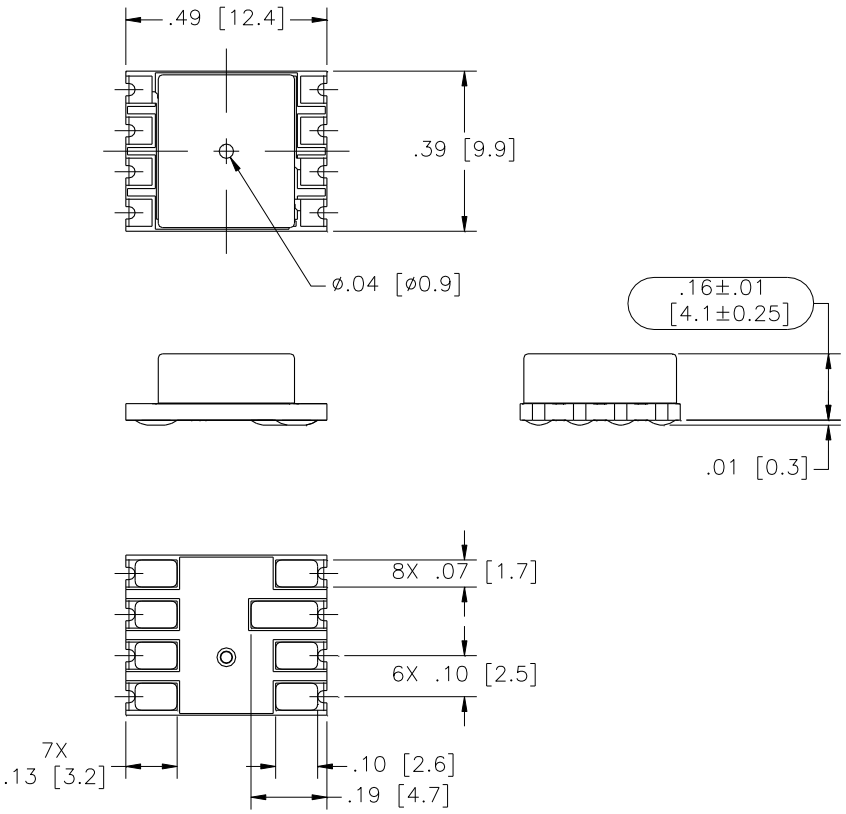

APPLICATION NOTES

Measurement Specialties offers a comprehensive selection of product support documentation.

MS45xx Series Application Note

- Bypass Capacitor Selection
- Pressure Hose Recommendations
- PCB Layout Recommendations

Interfacing to MEAS Digital Pressure Modules

- I^2C or SPI Protocol Description
- Data Fetch, Measurement Request Commands
- Timing Diagrams

Configuration, POR and Power Consumption

- Standard and Low Power Configuration
- Power On Reset (POR)
- Current Consumption by Sampling Frequency

AVAILABLE OPTIONS

Gel Coat (-F Option)

The MS4525DO is designed for non-ionic and clean dry air applications. Select this option for added protection in high humidity or slightly corrosive environments with the application of a silicone gel elastomer to sensor and ASIC. For questions concerning media compatibility, contact the factory.

Low Power (-L Option)

Select this option for battery powered or handheld device applications. In this configuration, the sensor and calibration microcontroller are powered down, drawing a current of ~ 0.6uA (V_s=5.0 V_{DC}). When the master sends a **Read MR** (measurement request) command (I^2C or SPI); the sensor is “awaken” and begins the measurement cycle; data is then placed onto the output registers. The sensor and calibration microcontroller are powered down again, awaiting the **Read DF** (data fetch) command from the master.

ORDERING INFORMATION

4525DO – DS 3 B K 030 D P M

Package Type	
SS	Single Sideport
DS	Dual Sideport
TP	Top Port
MM	Manifold Mount

Supply Voltage	
3	3.3 V_{DC}
5	5.0 V_{DC}

Output Type	
A	10% to 90%
B	5% to 95%

Interface Type	
I	I^2C (Addr. 0x28H)
J	I^2C (Addr. 0x36H)
K	I^2C (Addr. 0x46H)
S	SPI (Not available for 'L' pin Style)
0	I^2C (Addr. 0x48H)
:	:
9	I^2C (Addr. 0x51H)

Option Type	
[Blank]	No Option
F	Gel Coating
L	Low Power
M	Gel Coat & Low Power

Pin Type	
P	Thru Hole
S	J Lead
L	In Line
C	Castellation

Pressure Type	
D	Differential
G	Gauge
V	Vacuum
A	Absolute
C	Compound

Pressure Range [psi]
001
002
005
015
030
050
100
150

NORTH AMERICA
Measurement Specialties, Inc.,
a TE Connectivity company
Tel: 800-522-6752
Email: customercare.frmt@te.com

EUROPE
Measurement Specialties (Europe), Ltd.,
a TE Connectivity Company
Tel: +31 73 624 6999
Email: customercare.bevx@te.com

ASIA
Measurement Specialties (China) Ltd.,
a TE Connectivity company
Tel: 0400-820-6015
Email: customercare.shzn@te.com

TE.com/sensorsolutions

Measurement Specialties, Inc., a TE Connectivity company.

Measurement Specialties, TE Connectivity, TE Connectivity (logo) and EVERY CONNECTION COUNTS are trademarks. All other logos, products and/or company names referred to herein might be trademarks of their respective owners.

The information given herein, including drawings, illustrations and schematics which are intended for illustration purposes only, is believed to be reliable. However, TE Connectivity makes no warranties as to its accuracy or completeness and disclaims any liability in connection with its use. TE Connectivity's obligations shall only be as set forth in TE Connectivity's Standard Terms and Conditions of Sale for this product and in no case will TE Connectivity be liable for any incidental, indirect or consequential damages arising out of the sale, resale, use or misuse of the product. Users of TE Connectivity products should make their own evaluation to determine the suitability of each such product for the specific application.

© 2015 TE Connectivity Ltd. family of companies All Rights Reserved.